Onderdelentekening
Prime 85S / 100S / 120S / 150S / 200S

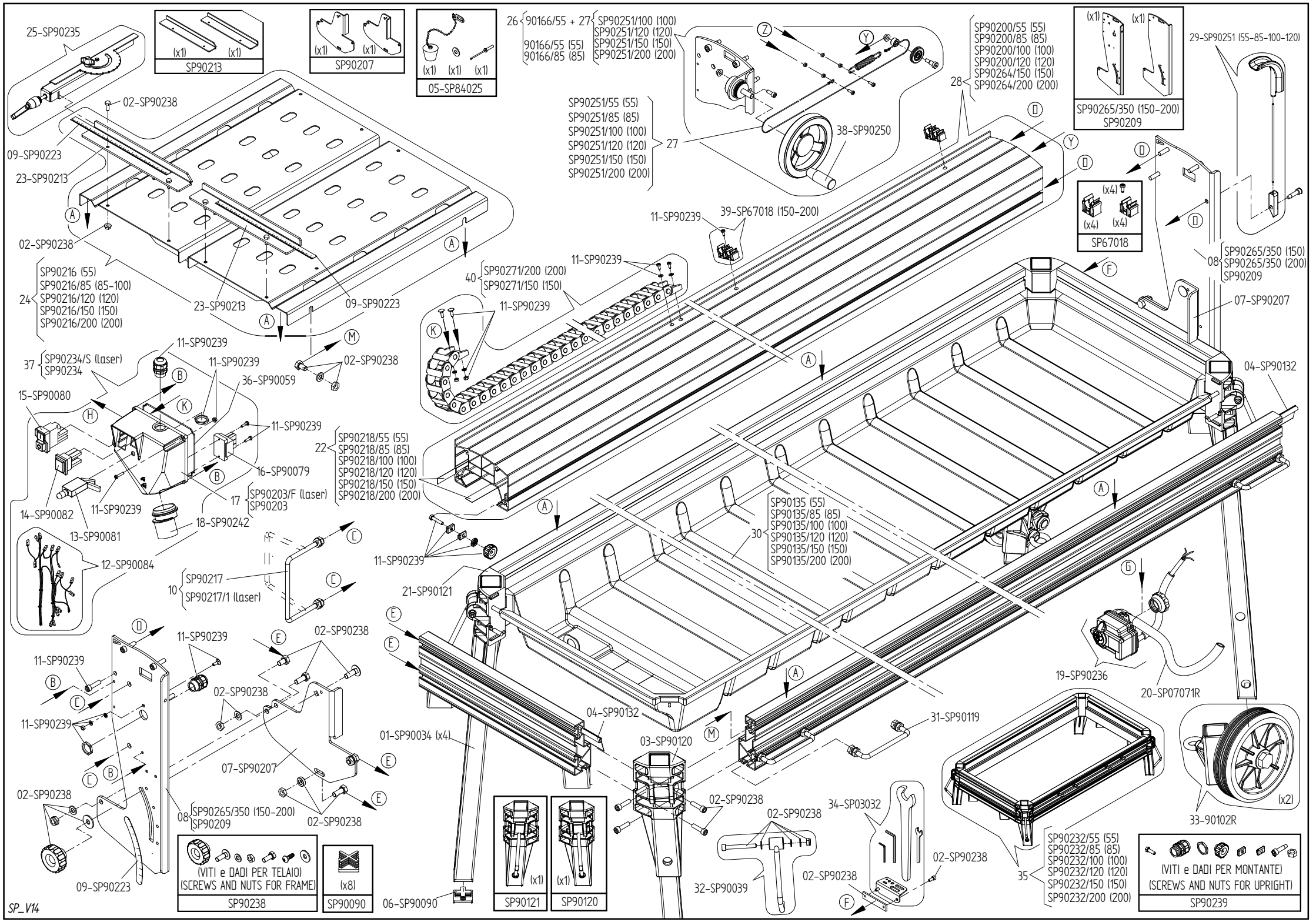

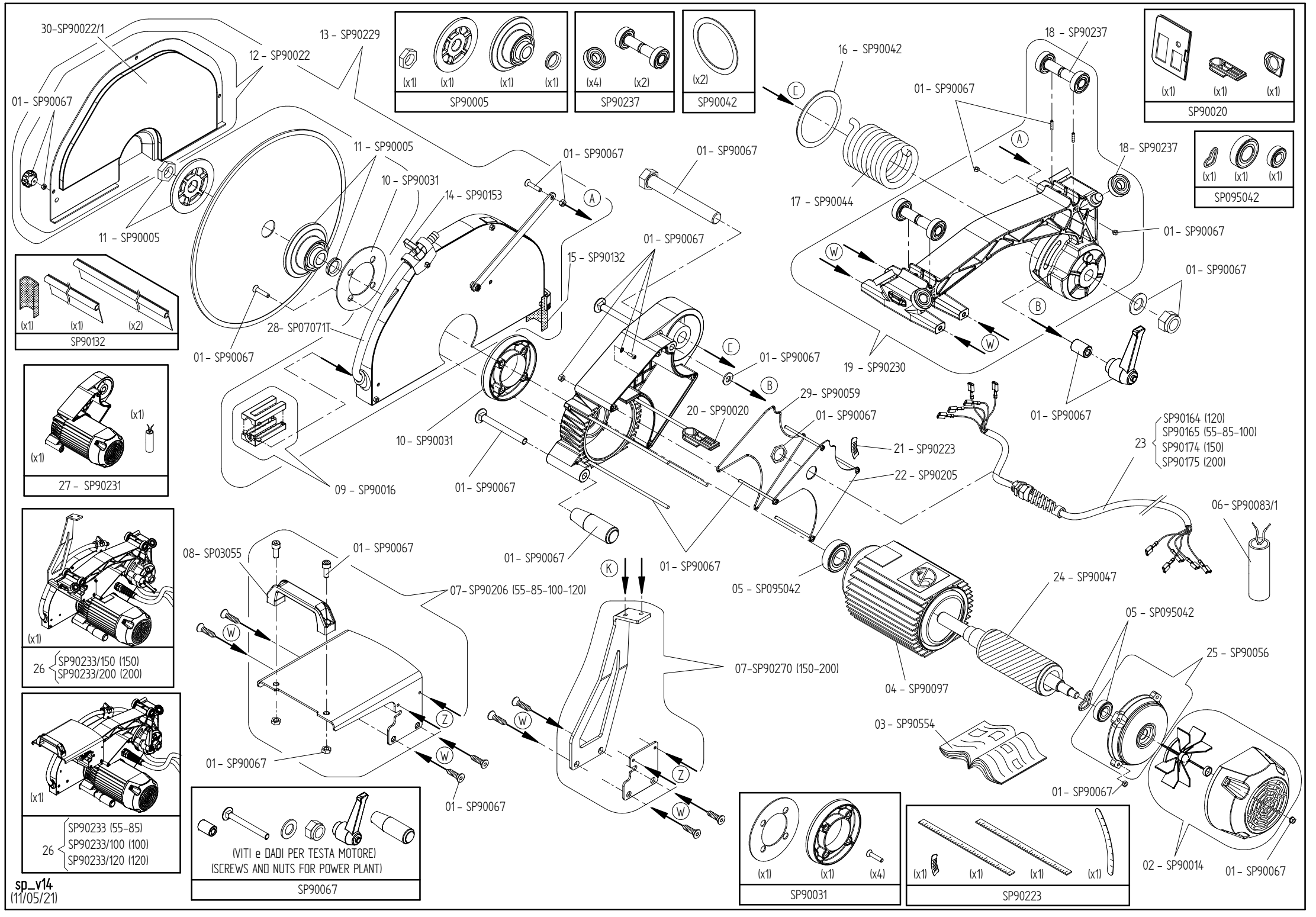

sp_v14
(11/05/21)